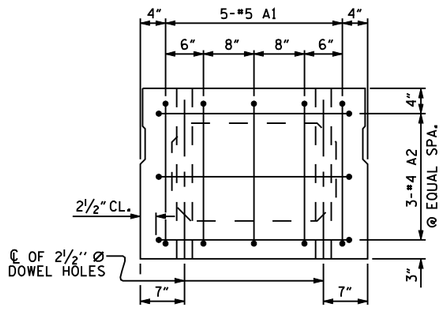

END ELEVATION

SHOWING PLACEMENT OF #5 & #4 "A" BARS AND LOCATION OF DOWEL HOLES. (INTERIOR BOX BEAM SECTION SHOWN-EXTERIOR SECTION SIMILAR EXCEPT SHEAR KEY LOCATION. STRAND LAYOUT NOT SHOWN.)

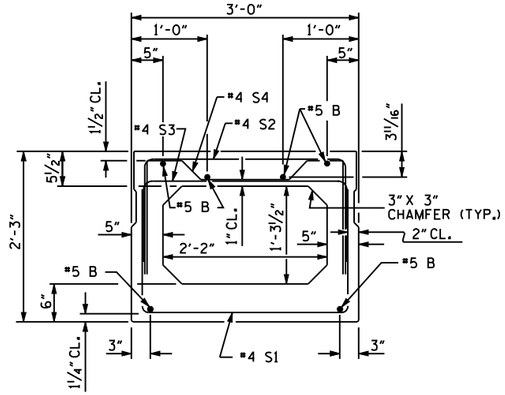

INTERIOR BOX BEAM SECTION

(STRAND LAYOUT NOT SHOWN)

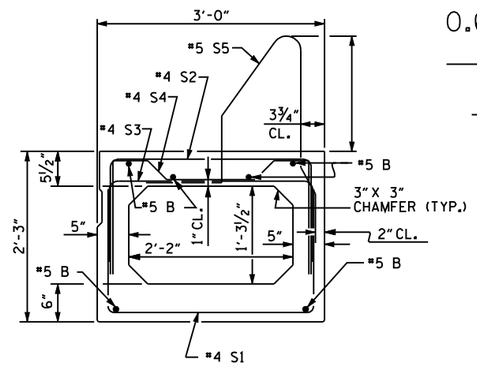

EXTERIOR BOX BEAM SECTION

(STRAND LAYOUT NOT SHOWN)

0.6" Ø LOW RELAXATION STRAND LAYOUT

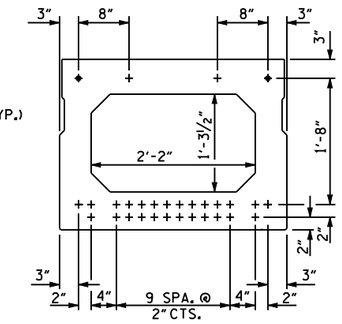

TYPICAL STRAND LOCATION

(__ STRANDS REQUIRED)

(INTERIOR BOX BEAM SECTION SHOWN-EXTERIOR SECTION SIMILAR EXCEPT SHEAR KEY LOCATION)

DEBONDING LEGEND

● FULLY BONDED STRANDS

GRADE 270 STRANDS	
	0.6" Ø L.R.
AREA (SQUARE INCHES)	0.217
ULTIMATE STRENGTH (LBS. PER STRAND)	58,600
APPLIED PRESTRESS (LBS. PER STRAND)	43,950

BAR TYPES

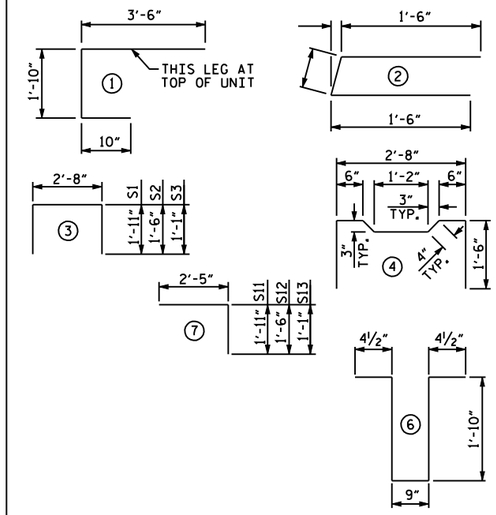

ALL BAR DIMENSIONS ARE OUT TO OUT

BILL OF MATERIAL FOR ONE BOX BEAM SECTION

				EXTERIOR UNIT		INTERIOR UNIT	
BAR	NUMBER	SIZE	TYPE	LENGTH	WEIGHT	LENGTH	WEIGHT
A1	10	#5	1	6'-2"	64	6'-2"	64
A2		#4	2				
B		#5	STR				
K1		#4	6	5'-2"		5'-2"	
K2		#4	STR				
S1		#4	3	6'-6"		6'-6"	
S2		#4	3	5'-8"		5'-8"	
S3		#4	3	4'-10"		4'-10"	
S4		#4	4	5'-10"		5'-10"	
S11		#4	7	4'-4"		4'-4"	
S12		#4	7	3'-11"		3'-11"	
S13		#4	7	3'-6"		3'-6"	
* S5		#5	5			--	--
REINFORCING STEEL					LBS.		LBS.
* EPOXY COATED REINF. STEEL					LBS.		
--- P.S.I. CONCRETE					CU. YDS.		CU. YDS.
0.6" Ø L.R. STRANDS					No.	No.	

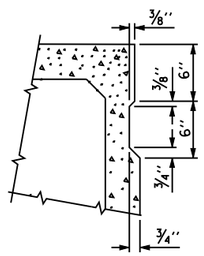

SHEAR KEY DETAIL

NOTE: OMIT SHEAR KEY ON OUTSIDE FACE OF EXTERIOR BOX BEAMS.

END VIEW

(SHOWING #4 "S" BARS IN END OF BEAM)

CHAMFER DETAIL

SHOWING 6" VOID CHAMFER

DETAIL "B"

EXTERIOR UNIT SHOWN, INTERIOR UNIT SIMILAR EXCEPT OMIT #5 S5 BARS. "B" BARS AND "A" BARS NOT SHOWN.

EXTERIOR UNIT SHOWN, INTERIOR UNIT SIMILAR EXCEPT OMIT #5 S5 BARS. FOR LOCATION OF DIAPHRAGMS, SEE PLAN OF SPANS. FOR REINFORCING STEEL IN DIAPHRAGMS, SEE DIAPHRAGM DETAILS.

PROJECT NO. _____

_____ COUNTY

STATION: _____

SHEET _ OF _

STATE OF NORTH CAROLINA
DEPARTMENT OF TRANSPORTATION
RALEIGH

STANDARD
3'-0" X 2'-3"
PRESTRESSED CONCRETE
BOX BEAM UNIT
SPAN "_"

REVISIONS						SHEET NO.
NO.	BY:	DATE:	NO.	BY:	DATE:	
1			3			TOTAL SHEETS
2			4			

STD. NO. PCBB2

ASSEMBLED BY :	DATE :
CHECKED BY :	DATE :
DRAWN BY : TLA 5/05	ADDED 7/11/05
CHECKED BY : GM 6/05	REV. 5/1/06R TLA/GM